TUN-42131

2MP HD Hybrid IR Bullet Camera

Key Features

- Sony Exmor CMOS Sensor
- Full HD(2MP) Resolution(HD-TVI/AHD)
- Fixed 3.6mm Lens
- Day & Night(IR Cut Filter)
- 3DNR(Digital Noise Reduction)
- Sens-up(~x30)
- 1 Array IR LED
- IP66

Key Functions

- HD-TVI/AHD/CVBS Selectable
- High Speed, Long Distance Real Time Transmission
- NTSC/PAL Selectable
- Defog
- LSC(Lens Shading Correction)
- HSBLS(Highlight Suppression BLC)
- Privacy Masking
- Coaxial Communication(UTC)

Dimension

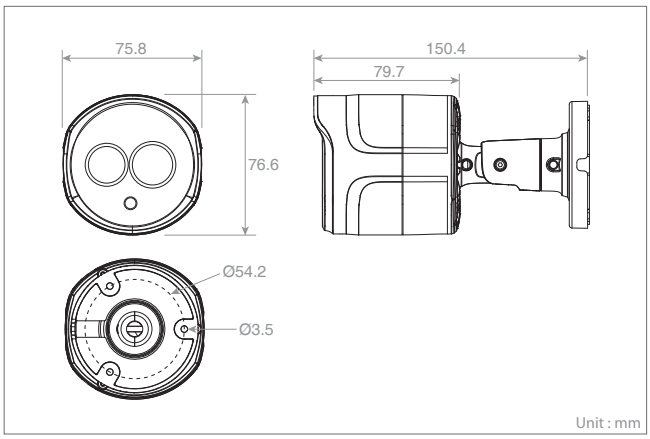

Technical Specifications

Model		TUN-42131
IMAGE		
Lens		Fixed 3.6mm, F2.0
Image Sensor	Type	1/2.9" SONY Exmor CMOS Sensor
	Pixels	1985(H)x1105(V)
Min. Illumination		Color : 1.0Lux@F2.0, 50IRE BW : 0Lux@IR LED On
Scanning Mode		Progressive Scan
Sync. System		Internal
Day and Night Mode		True D/N(Auto, Day, Night)
Wide Dynamic Range		Yes
Back Light Compensation		BLC, HSBLC
Noise Reduction		2DNR, 3DNR
White Balance Control		AWB, ATW, AWC, Indoor, Outdoor, Manual
Image Effect		Freeze, Mirror, Negative Image, LSC(Shading), Defog
Shutter Speed		Auto, 1/60, FLK~1/50000sec
Sens-up		Off, Auto(x2, x4, x6, x8, x10, x15, x20, x25, x30)
IR Illuminator	Quantity	1 Array IR LED
	Distance	20~25m
S/N Ratio		More Than 50dB(AGC Off)
VIDEO		
Resolution		1920x1080p
Frame Rate		25/30fps
Video Output		HD-TVI, AHD, CVBS Selectable
Video Mode		NTSC, PAL Selectable
FUNCTION		
Camera Title		15 Characters
Motion Detection		4 Zones
Privacy Mask Zone		4 Zones
Defect Detection		Live DPC, White DPC, Black DPC
Monitor		CRT, LCD
Language		ENG, CHN1, CHN2, GER, FRA, ITA, SPA, POL, RUS, POR, NED, TUR
OSD Setup		Coaxial Control(UTC)
EXTERNAL IN/OUT		
Power Input		DC Jack
Video Output		BNC Connector
Video Selection		Dip Switch Cable
ETC		
Operating Humidity		0~96%RH(Non-Condensing)
Operating Temperature		-20~+50℃
Power Supply		12VDC±10%
Power Consumption		210mA(2.52W)
Dimension		75.8(W)x76.6(H)x150.4(D)mm
Net Weight		Approx. 440g
Ingress Protection		IP66

Specifications are subject to change without notice.

HITRON SYSTEMS INC.
www.hitron.co.kr
HITRON SYSTEMS INC.
06367, HITRON B/D, 13, Bamgogae-ro 5 gil, Gangnam-gu, Seoul, Korea
T : 02-3410-9330~1 / F : 02-459-7586 / E : inquiry@hitron.co.kr

Copyright © 2017 HITRON INC. All right reserved.