NMH-52152A1

23X 2MP IR Speed Dome Network Camera

Key Features

- H.264, H.265 Support
- 2MP Resolution
- Optical Zoom 23X(5~117mm)
- True WDR, True Day & Night
- Power IR LED(up to 60m)
- Max. 380°/sec Preset Speed
- Preset(256), Tour(8), Pattern(8)
- Alarm In/Out(4/1), Audio In/Out(1/1)
- Micro SD Card(SDHC, SDXC)
- 12VDC, PoE
- IP66

Key Functions

- Hi-Stream(Smart Codec)
- Intelligent Video Motion Detection, Intrusion Detector
- Quad Stream(H.264/H.265, MJPEG)
- Onvif Profile S
- Easy Install : Zero Configuration, Discovery, PoE
- Multi User Authority, IP Filtering, HTTPS, SSL
- Cross Web Browsing(IE, Safari, Firefox, Chrome)
- Defog
- Audio Alert

Software

- SmartManager
- Titanium 2.0
- Titanium Mobile

Optional Accessory

- HDB243(Wall Mount)
- HVPCB2(Ceiling Mount)

Dimension

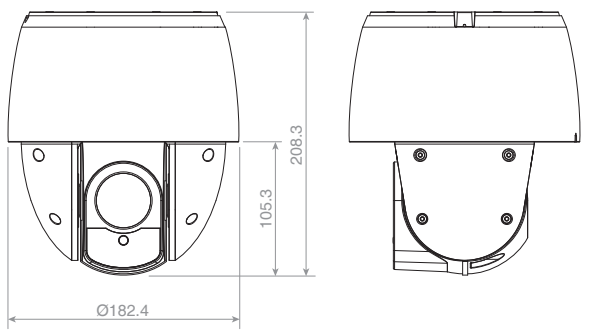

Unit : mm

Technical Specifications

Model		NMH-52152A1
IMAGE		
Lens		Optical Zoom 23X, 5~117mm
Angle of View		56.6~3°(H)
Image Sensor		1/2.8" SONY STARVIS CMOS Sensor
Min. Illumination		Color : 0.35Lux@50IRE / BW : 0Lux(IR LED On)
Scanning Mode		Progressive Scan
Wide Dynamic Range		True WDR
Day and Night Mode		True D/N(Auto, Day, Night)
Noise Reduction		2DNR, 3DNR
Digital Zoom		Yes(ROI)
Exposure Control		Auto, Iris Priority
White Balance Control		Auto, Manual
Metering Mode		Spot, Center, Average
Image Effect		Flip, Defog
Flicker Free Mode		50Hz, 60Hz
Shutter Speed		Auto(1/10,000~1sec)
IR Illuminator	Quantity	4 IR LED
	Distance	Up to 60m
VIDEO/AUDIO		
Compression		H.264(Baseline, Main, High Profile), H.265(Main Profile), MJPEG
Bitrate Control		CBR, CVBR
Resolution		1920x1080, 1440x1080, 1280x1024/720, 1024x768, 800x600/480, D1, 640x480, 400x240, CIF
Frame Rate		Max. 25/30fps
Streaming		Quad Stream(H.264/H.265x3, MJPEGx1)
Audio Compression		G.711
Audio Streaming		2 Way
PTZ FUNCTION		
Pan Range		360˚Endless
Pan Speed		Max. 380˚/sec.(Preset)
Tilt Range		-5~90˚
Tilt Speed		Max. 380˚/sec.(Preset)
Preset		256
Tour		8
Pattern		8
Home Function		Yes
SYSTEM		
Video Contents Analysis		Tampering, iVMD, Intrusion Detector
Motion Detection Area		16 Programmable Area(Include Area 8, Exclude Area 8)
Privacy Masking		16 Programmable Zone
Smart Codec		Hi-Stream
FTP Uploading		MJPEG
Event Notification		E-mail, FTP, Notification Server, XML Notification, Audio Alert
Audio Alert		User-Defined 3 Audio files
Login Authority		Administrator, Operator, Guest
Event Buffering	FTP	Pre : 30sec, Post : 30sec
	SD Record	Pre : 10sec, Post : 60sec
Manual Trigger		4 Programmable Trigger
Security		Multi User Authority, IP Filtering, HTTPS, SSL
Network Time Sync		NTP Server, Synchronized Computer, Manual
Software Reset		Restart, Reset, Factory Default
Hardware Factory Reset		Yes
Auto Recovery		Backup, Restore
Remote Upgrade		Web Browsing(IE, Chrome, Safari, Firefox), SmartManager
SD Recording Mode		Event, Continuous
NETWORK		
Protocol		TCP/IP, UDP, IPv4/v6, HTTP, HTTPS, QoS, FTP, UPnP, RTP, RTSP, RTCP, DHCP, ARP, Zeroconf, Bonjour
Client Software		Web, SmartManager, Client S/W, Mobile S/W
Max. User Connection		Live : 10 Users, Playback : 3 Users
API Support		Open API, Onvif Compliance
Mobile Support		Android, iOS
EXTERNAL IN/OUT		
Audio		1 Input, 1 Output(Terminal Block)
Alarm		4 Input, 1 Output(Terminal Block)
Ethernet		RJ-45(10/100Base-T)
u-SD Card		SDHC, SDXC
ETC		
Operating Humidity		0~90% RH(Non-Condensing)
Operating Temperature		-10~+50℃
Power Supply		HPoE, 12VDC
Power Consumption		380mA(20W)@HPoE 1.5A(18W)@12VDC
Dimension		182.4(Ø)x208.3(H)mm
Net Weight		Approx. 2.8kg
Ingress Protection		IP66

Specifications are subject to change without notice.

HITRON SYSTEMS INC.
www.hitron.co.kr
HITRON SYSTEMS INC.
5953-85, Seodong-daero, Samjuk-myeon, Anseong-si, Gyeonggi-do, 17515, Korea
T : 031-670-9100 / F : 031-670-9199 / E : inquiry@hitron.co.kr
Copyright © 2018 HITRON SYSTEMS INC. All right reserved.