NUX-6246R

Full HD Built-in IR LED Bullet Network Camera

Key Features

- Full HD(1920x1080) Resolution 25/30fps
- Varifocal 2.8~12mm Lens
- True Day & Night
- D-WDR(ATR-EX)
- 24 IR LEDs for 25m Coverage
- Audio In/Out(1/1), Alarm In/Out(1/1)
- Micro SD Card up to 128GB
- PoE, 12VDC
- IP67

Key Functions

- Auto Exposure, Auto White Balance
- Quad Stream(H.264, MPEG4, MJPEG)
- Onvif Profile S
- Easy Install : Zero Configuration, Discovery, PoE
- Event Boosting, FTP Image Upload, Web Casting, Open VPN, QoS, IP Filtering
- Cross Web Browsing(IE, Safari, Firefox, Chrome)
- Privacy Masking
- AIHM Event
- Event Buffering
- Video Contents Analysis

Software

- SmartManager
- NC-Titanium
- Tive HD
- Titanium Plus VMS

Optional Accessory

- HJB200(Junction Box)

Dimension

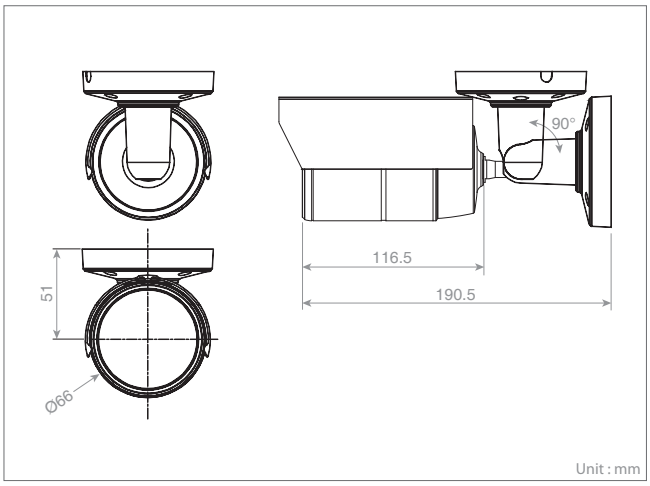

Technical Specifications

Model		NUX-6246R
IMAGE		
Lens		Varifocal 2.8~12mm, F1.4, DC Iris
Angle of View		105~37°(H)
Image Sensor	Type	1/2.9" SONY Exmor CMOS Sensor
	Pixels	1984(H)x1105(V)
Min. Illumination		Color : 0.1Lux / BW : 0Lux@F1.4, 50IRE
Scanning Mode		Progressive Scan
Wide Dynamic Range		D-WDR(72dB)
Day and Night Mode		True D/N(Auto, Day, Night)
Noise Reduction		3DNR
Digital Zoom		16X
Exposure Control		Auto
White Balance Control		Auto, Incandescent, Fluorescent, Outdoor, Manual
Back Light Compensation		Yes
Image Effect		Flip, Mirror, Aisle, Defog, HLC, S-LDC
Flicker Free Mode		50Hz, 60Hz
Shutter Speed		Auto(1/10,000~1sec), Manual
IR Illuminator	Quantity	24 IR LEDs
	Angle	76°(H)
	Distance	Up to 25m
Motorized Lens Control		-
VIDEO/AUDIO		
Compression		H.264(Baseline, Main, High Profile), MJPEG
Bitrate Control		CVBR, VBR
Resolution		1920x1080, 1280x1024, 1280x720/960, 1024x768, 704x480/576, 640x360/480, 320x240
Frame Rate		Max. 25/30fps
Streaming		25/30fps(Quad Stream : H.264x3, MJPEGx1)
Composite Out		-
Audio Compression		G.711
Audio Streaming		2 Way
SYSTEM		
Video Contents Analysis		Tampering, Line Detector, Field Detector
Motion Detection Area		16 Programmable Area(Include Area 8, Exclude Area 8)
Privacy Mask Zone		8 Programmable Zone
FTP Uploading		MJPEG
Event Notification		E-mail, FTP, Notification Server, XML Notification, AIHM
Audio Alert		User-Defined 3 Audio Files
Login Authority		Administrator, Operator, Guest
Event Buffering	FTP	Pre : 30sec, Post : 30sec
	SD Record	Pre : 10sec, Post : 60sec
Manual Trigger		4 Programmable Trigger
Security		Multi User Authority, IP Filtering, HTTPS, SSL
Network Time Sync		NTP Server, Synchronized Computer, Manual
Software Reset		Restart, Reset, Factory Default
Hardware Factory Reset		Yes
Auto Recovery		Backup, Restore
Remote Upgrade		Web Browsing(IE, Chrome, Safari, Firefox), SmartManager
SD Recording Mode		Event, Continuous
NETWORK		
Protocol		TCP/IP, UDP, IPv4/v6, HTTP, HTTPS, QoS, FTP, UPnP, RTP, RTSP, RTCP, DHCP, ARP, Zeroconf, Bonjour
Client Software		Web, SmartManager, Client S/W, Mobile S/W
Max. User Connection		Live : 10 Users, Playback : 3 Users
API Support		Open API, Onvif Compliance
Mobile Support		Android, iOS
EXTERNAL IN/OUT		
Video Composite Out		-
Audio		1 Input, 1 Output(Terminal Block)
Alarm		1 Input, 1 Output(Terminal Block)
Ethernet		RJ-45(10/100Base-T)
u-SD Card		SDHC, SDXC(128GB)
RS485		-
OSD Remote Control		-
ETC		
Operating Humidity		0~90%RH(Non-Condensing)
Operating Temperature		-20~+50℃
Power Supply		PoE(IEEE802.3af Compliance, Class0), 12VDC
Power Consumption		120mA(5.7W)@PoE / 450mA(5.4W)@12VDC
Dimension		66(Ø)x190.5(D)mm
Net Weight		Approx. 500g
Ingress Protection		IP67

Specifications are subject to change without notice.

HiTRON SYSTEMS INC.
www.hitronsecurity.com
HITRON INC.
135-220, HITRON B/D 726-5, SUSEO-DONG, KANGNAM-GU, SEOUL, KOREA
T : 02-3410-9330~1 / F : 02-459-7586 / E : inquiry@hitron.co.kr

Copyright © 2016 HITRON INC. All right reserved.